Dimensions

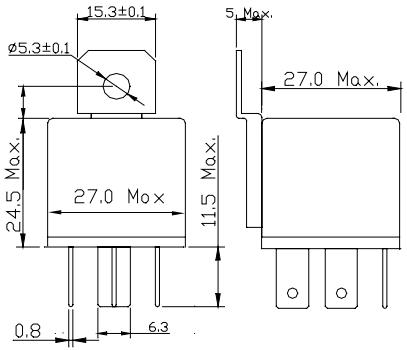

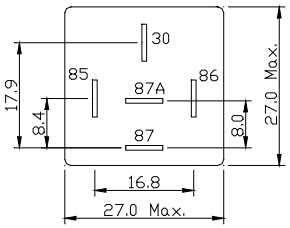

Nominal Coil Voltage: 24V
Rated Current: 67mA
Power Consumption: 1,6W
Coil Resistance: 360Ohm +/-10%
Switching Voltage: DC 75V
Feature: Bracket
Relays Type: Change over
Contact Material: Silver Alloy
Nominal Current: 10/20A
Operation Life Electrical: 100,000
Operation Life Mechanical: 1,000,000
Temperature Range: -40°C...+85°C
Pulling Time: ~7ms
Drop Out Time: ~5ms
Weight: 30g. approx.
Insulation Resistance: 100MOhm Min.(500V DC.)

Circuit Diagram

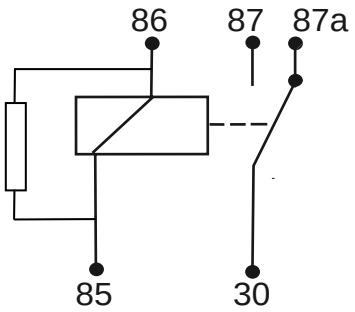

					Date	Name	Mini Relays	Wittrin Electronic www.wittrin.com
				Author	30.10.06			
				Scale	Relais Wechsler, 24V, 10/20A, Widerstand, Lasche			Part No. CU-430-C51-1
Index	Version	Date	Name					